UNIVERSITÀ DI PISA

UNI BASEL

Laurea Specialistica
Telecommunications Engineering

19 July 2010

A Signal Processing Approach to the Analysis of Chemical Networking Protocols

Author

Massimo Monti

Supervisors

Prof. Marco Luise (University of Pisa)

Prof. Filippo Giannetti (University of Pisa)

Prof. Christian Tschudin (University of Basel)

Thomas Meyer (University of Basel)

Chemically Inspired Communication System

Communication Model

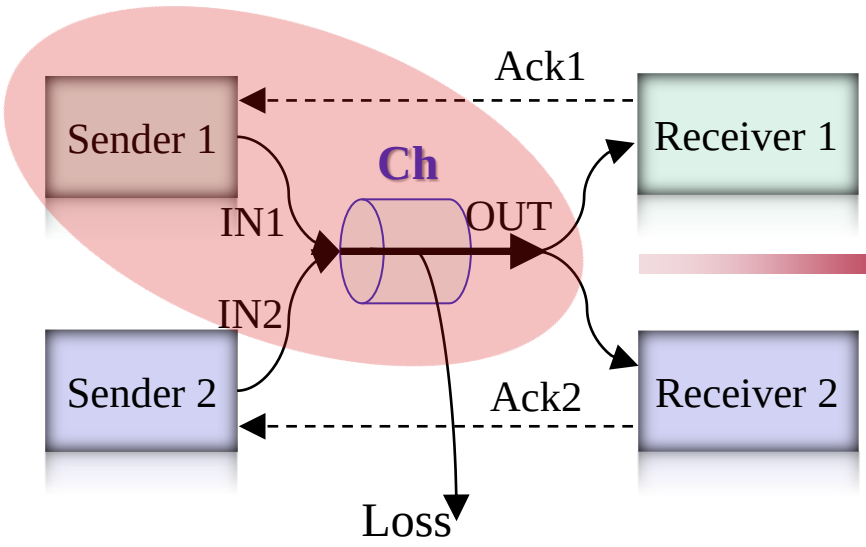

Chemical Model

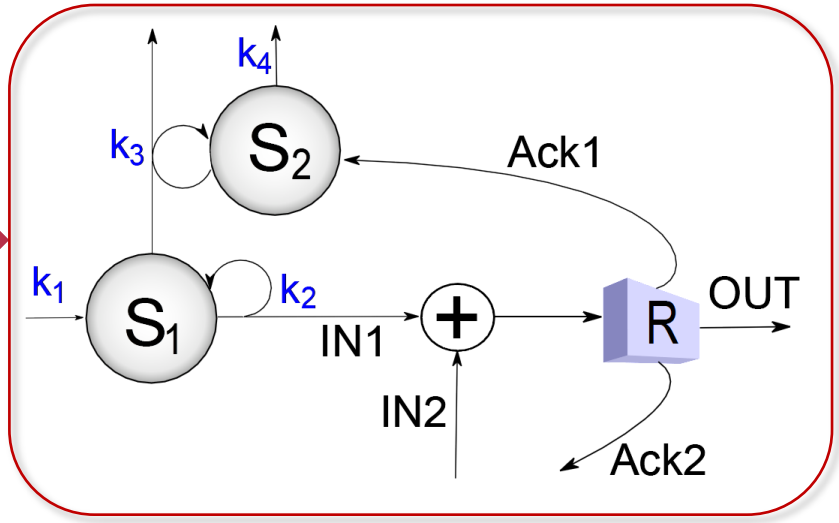

Congestion Avoidance CNP (T.Meyer, to be published)

! *Dynamics*

Concept of Chemical Networking Protocols (CNPs)

Goal

Equilibrium
Robustness
Self-Healing
Self-Optimization
Self-Protection

Life-like properties observed in nature

Chemical Metaphor

Molecules	←→	Packets
Chemical vessel	←→	Communication network nodes
Chemical reactions	←→	Communication links
Chemical virtual machines	←→	Computers with standard CPU

Chemical model implementation: *Fraglets simulator*.

CNP Information Encoding

User Information

User information is encoded *inside packets*.

A certain type of molecules (*species*) contain the same string of symbols.

e.g. `[node2 HELLO WORLD]`

System State Information

System state information is encoded in the *packet rate* itself.

- Concentration of a chemical species ≡ Number of molecules of that species.
- Reactions happen according to the «Law of mass action»:

Reaction Rate ∝ *Species concentration*

! *Randomize* queue entries
Schedule the service

Forwarding as fast as possible

CNP Properties

Dynamics Forecast

- Communication *protocol* implementations $\xrightarrow{\text{mapped}}$ Abstract *chemical models*
- Chemical model *dynamics* are analyzable
- Dynamics analysis $\xrightarrow{\text{lead to}}$ Chemical model *optimization*

$\downarrow$ lead to

Protocol implementation optimization

Standard Analysis of Network Dynamics (1/2)

The Chemical Master Equation (CME)

The chemical model as

a continuous time discrete space Markov jump process

(System state equals species concentration)

⬇

Dynamics of the system probability distribution governed by the CME

Features:

- ⬆ Exact analysis of the *stochastic* dynamical behavior of a model
- ⬇ Very high computational complexity
- ⬇ Solution not always possible

Standard Analysis of Network Dynamics (2/2)

The Differential Rate Equations Approximation (DREs)

Deterministic approximation of the exact stochastic behavior.

Features:

- ⬆ Decrease of the computational complexity (still *high*)
- ⬇ High concentration systems *required*
- ⬇ Dependence on initial condition

The New Signal Processing Approach

Concept

Chemical networks as systems of *blocks* and *interconnections*.

Concentration seen as a *continuos-time continuos-value* signal.

Features

- Transfer function description
  - ⬆ Generality of results
- Based on Differential Rate Equations (DREs) approximation
  (*DREs model description* ➡ *Laplace transform solution)*
  - ⬆ Low computational complexity
  - ⬇ Deterministic approximation
  - ⬇ Dependence on initial condition

Our Analysis Approach of Linear CNPs

The Disperser CNP

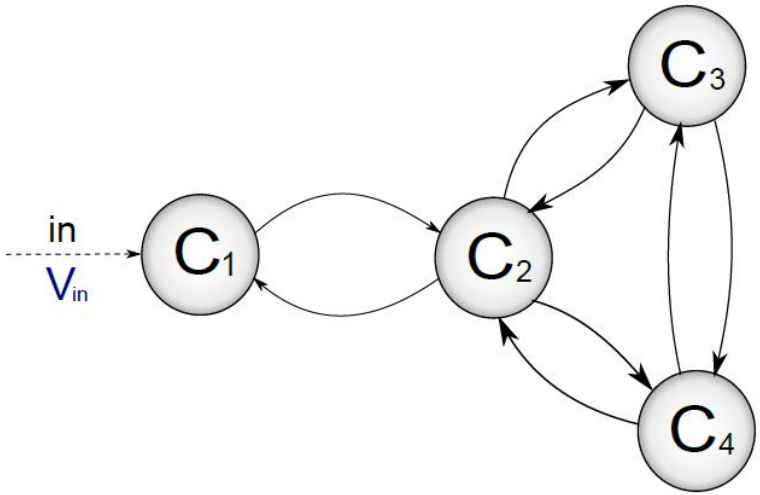

Connections Typology

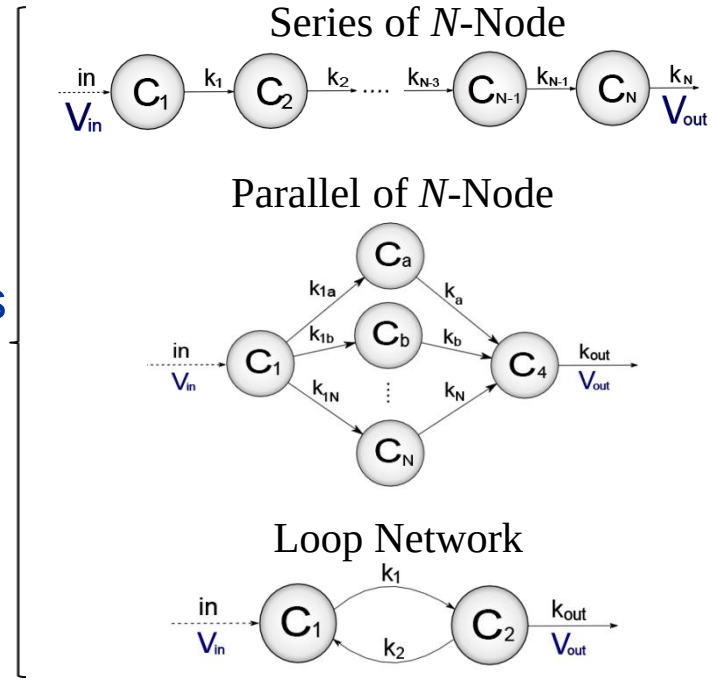

Disperser Features:

Species ≡ Vessels ≡ Nodes
Impulse input ≡ Injenction of molecules
Distributed average computation
Molecules equally distributed over the network

Elementary Reactions

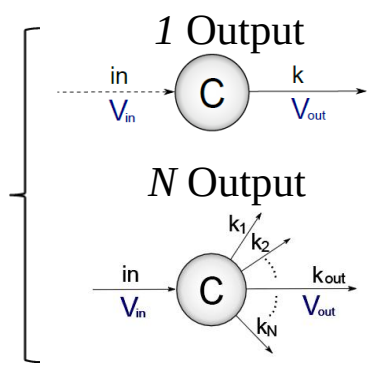

Simulink Schematic

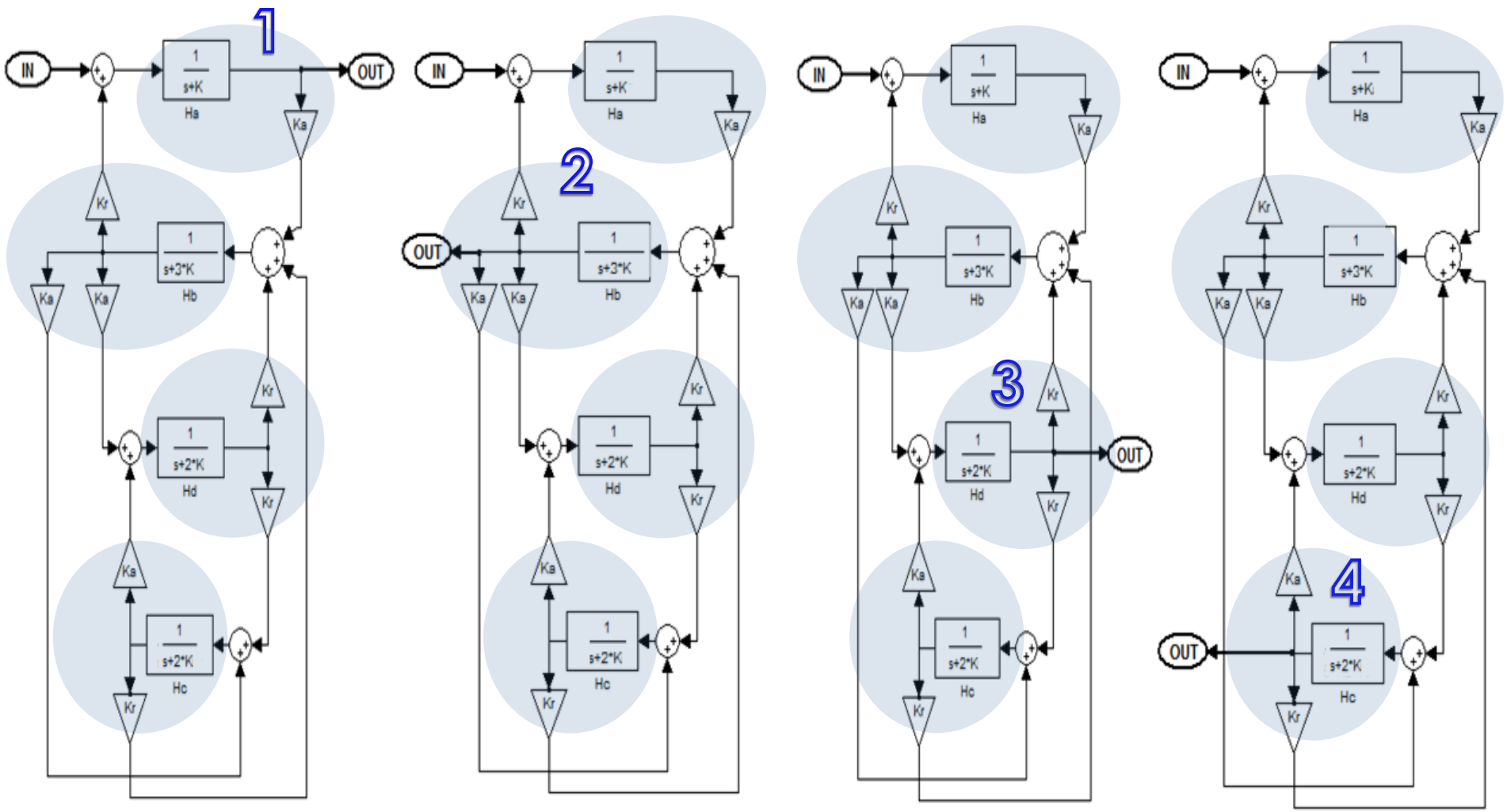

Node 1 Node 2 Node 3 Node 4

Analysis Results (1/2)

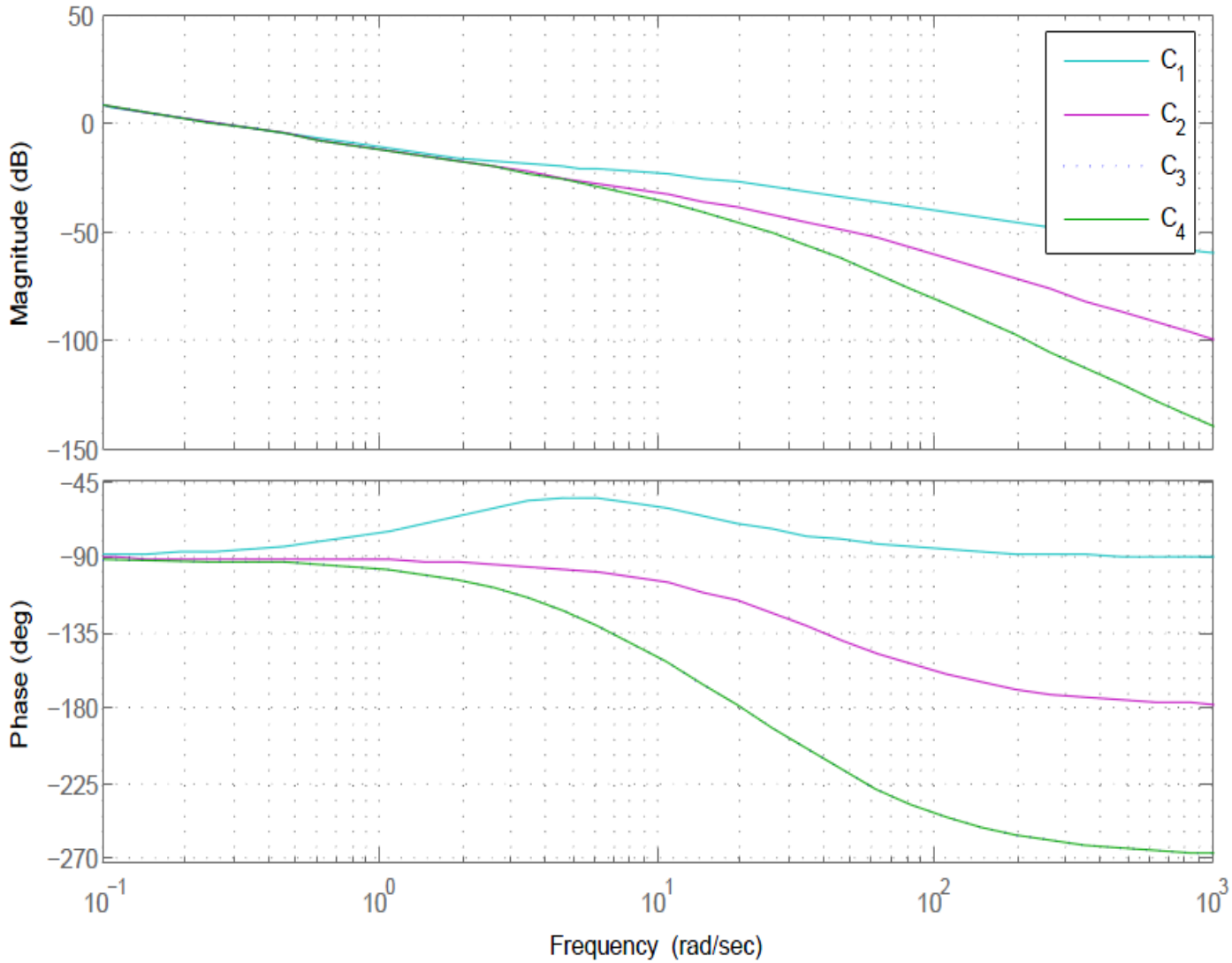

Frequency Transforms

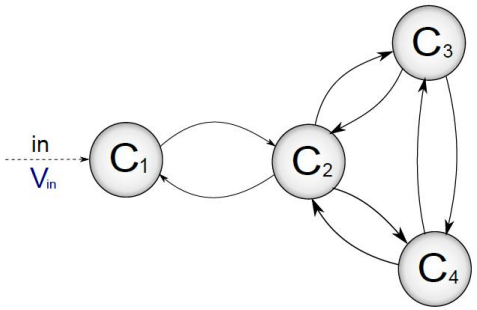

The Disperser CNP

Analysis Results (2/2)

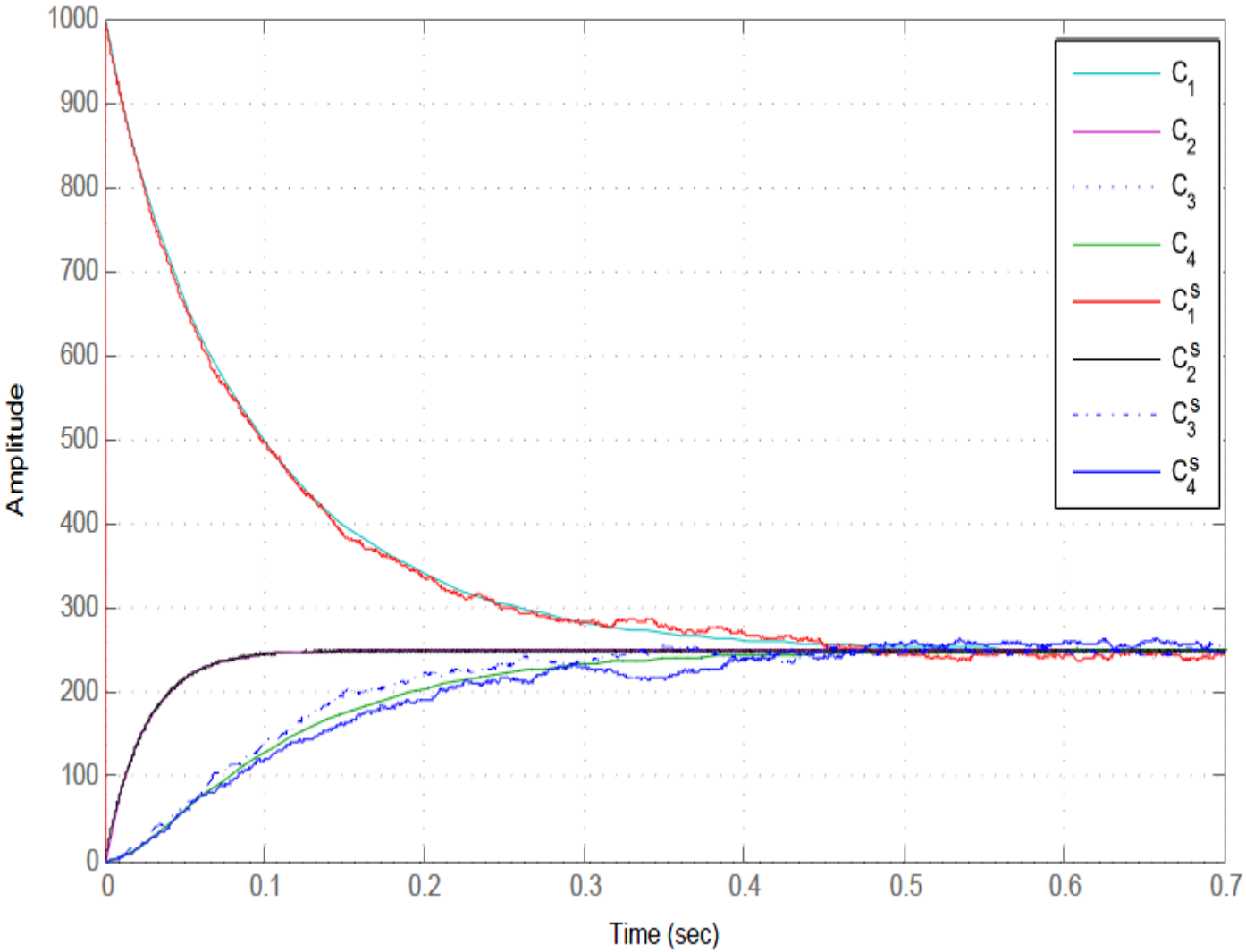

Impulse Responses

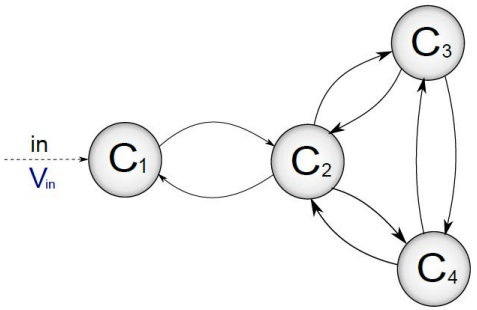

The Disperser CNP

System Control Theory (1/2)

State Variable Representation

$$\begin{cases} \dot{\underline{x}}(t) = \underline{\underline{A}} \cdot \underline{x}(t) + \underline{\underline{B}} \cdot \underline{u}(t) \\ \underline{y}(t) = \underline{\underline{O}} \cdot \underline{x}(t) + \underline{\underline{D}} \cdot \underline{u}(t) \end{cases}$$

- $\underline{\underline{A}}$ State matrix
- $\underline{\underline{B}}$ Input matrix
- $\underline{\underline{O}}$ Output matrix
- $\underline{\underline{D}}$ Direct transmission matrix

Block Diagram

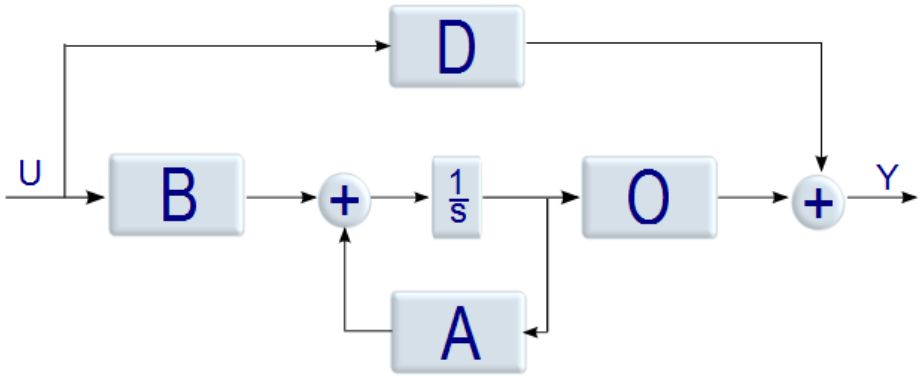

! *Analyzed systems must be **Linear Time Invariant (LTI)***

System Control Theory (2/2)

Frequency Transform

Frequency characterization of species concentration

$$\underline{\underline{C}}(s) = \underline{\underline{O}}\left(\underline{\underline{I}} \cdot s - \underline{\underline{A}}\right)^{-1} \underline{\underline{B}} + \underline{\underline{D}}$$

Step Response

Dynamical behavior of the network

$$\underline{\underline{Y}}(s) = \frac{1}{s} \cdot \underline{\underline{C}}(s) \rightleftharpoons \underline{\underline{y}}(t)$$

! *Analyzed systems must be **Linear Time Invariant (LTI)***

A Non-Linear CNP

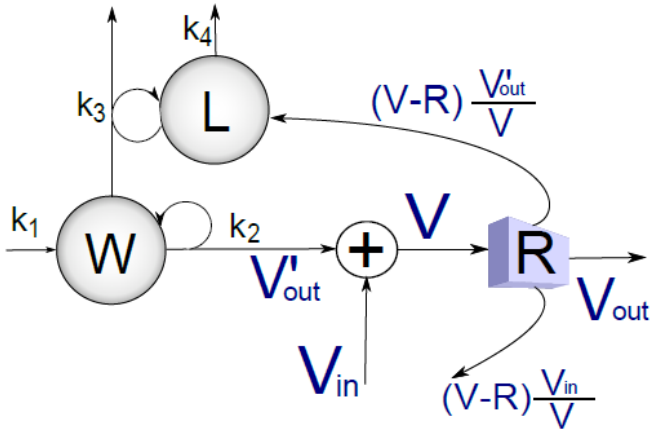

Non-Linear Chemical Model

$$\begin{cases} \dot{w} = k_1 + 0 - k_3 \cdot w \cdot l + 0 \\ \dot{l} = 0 + k_2 \cdot w - R\frac{k_2 \cdot w}{k_2 \cdot w + v_{in}} + 0 - k_4 \cdot l \end{cases}$$

DREs with Non-Linearities

- Traffic Generation of Tx.1
- Tx.1 Output Rate
- Tx.2 Output Rate
- Channel Limitation
- Actual Network Output Rate
- Selective Feedbacks

- Species
- Molecules
- Reactions
  - Chemical Homeostasis
  - Species Dilution Flow
- Reaction Coefficients

Metabolic Control Analysis to Non-Linear CNPs

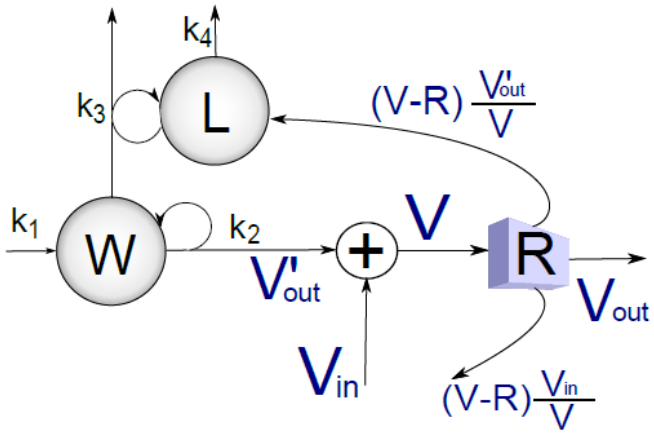

Non-Linear Chemical Model

$$\begin{cases} \dot{w} = k_1 + 0 - k_3 \cdot w \cdot l + 0 \\ \dot{l} = 0 + k_2 \cdot w - R\frac{k_2 \cdot w}{k_2 \cdot w + v_{in}} + 0 - k_4 \cdot l \end{cases}$$

DREs with Non-Linearities

Concept: System *linearization* around a fixed point (*steady states*)

$$\underline{\dot{s}}(t) = \underline{\underline{N}} \cdot \underline{v}\Big(\underline{s}(t), \underline{p}(t)\Big) \quad \Rightarrow \quad \underline{\dot{x}}(t) = \underline{\underline{N}} \cdot \frac{\partial \underline{v}}{\partial \underline{s}} \cdot \underline{x}(t) + \underline{\underline{N}} \cdot \frac{\partial \underline{v}}{\partial \underline{p}} \cdot \underline{u}(t)$$

State Variable Representation

$$\underline{\underline{A}} = \underline{\underline{N}} \cdot \frac{\partial \underline{v}}{\partial \underline{s}}\bigg|_{(\underline{s}^{st}, \underline{p}^{st})} \qquad \underline{\underline{B}} = \underline{\underline{N}} \cdot \frac{\partial \underline{v}}{\partial \underline{p}}\bigg|_{(\underline{s}^{st}, \underline{p}^{st})} \qquad \underline{\underline{O}} = \underline{\underline{I}} \qquad \underline{\underline{D}} = 0$$

Analysis Results (1/2)

Frequency Transform $W^{(n)}(s)$

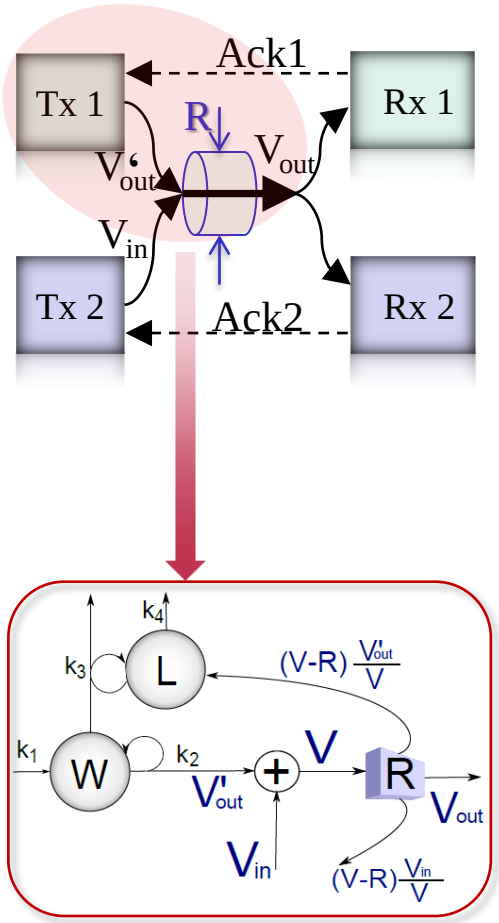

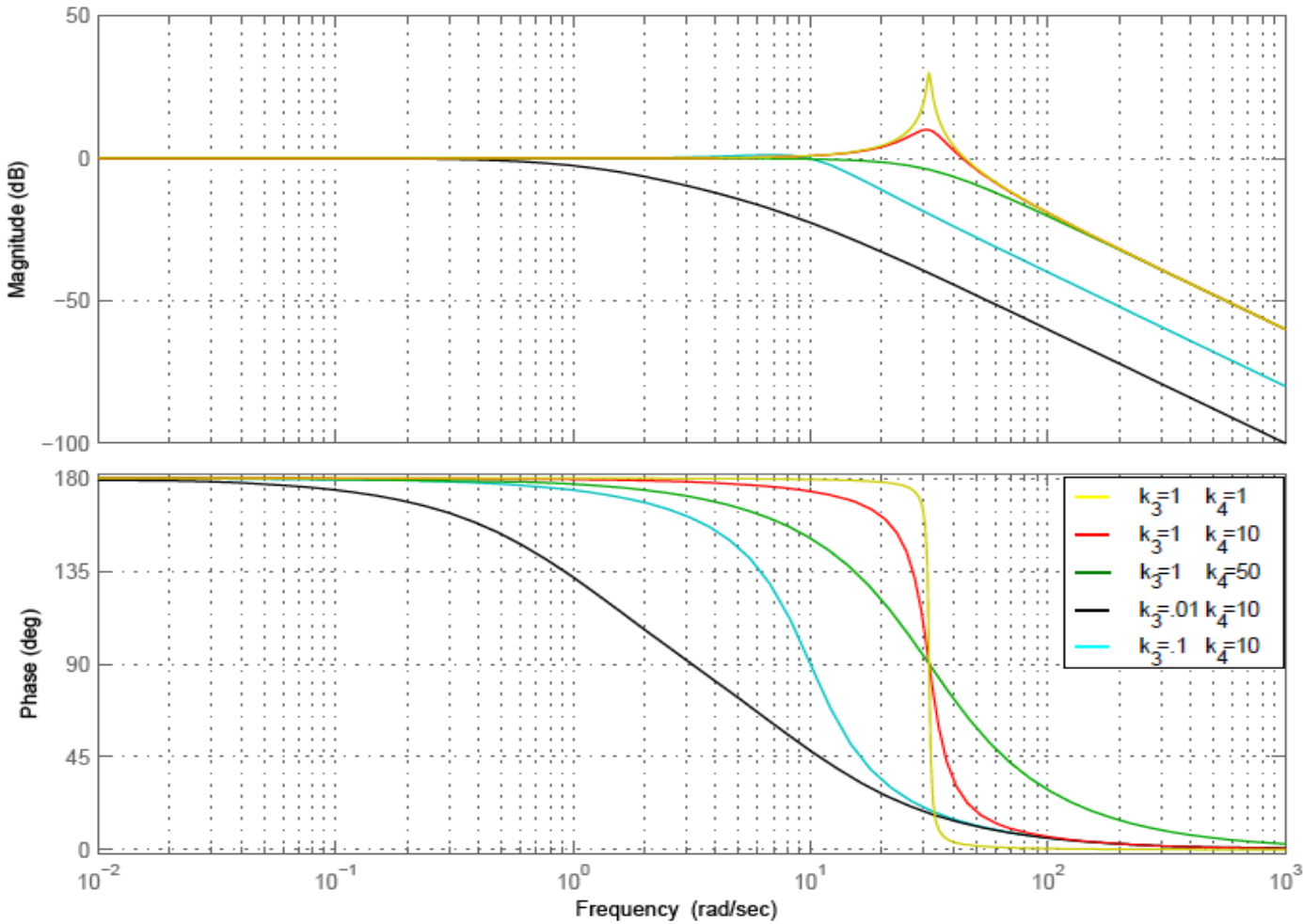

Analysis Results (2/2)

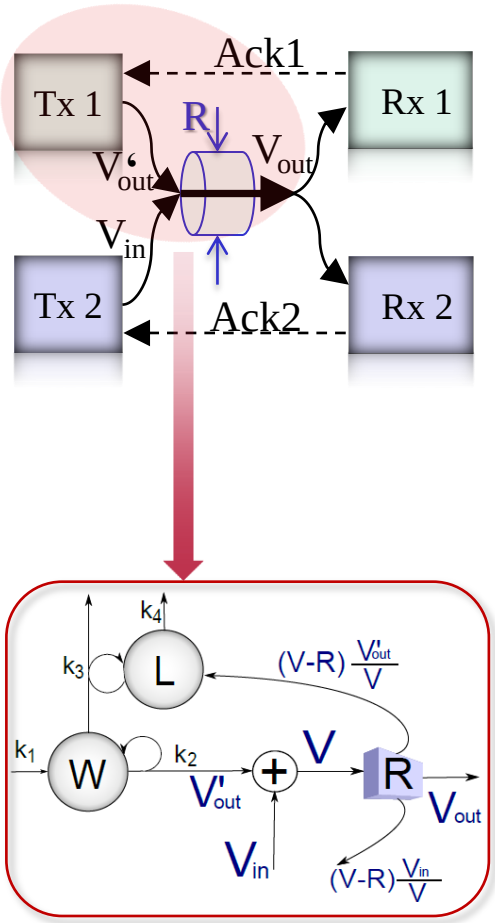

Step Response

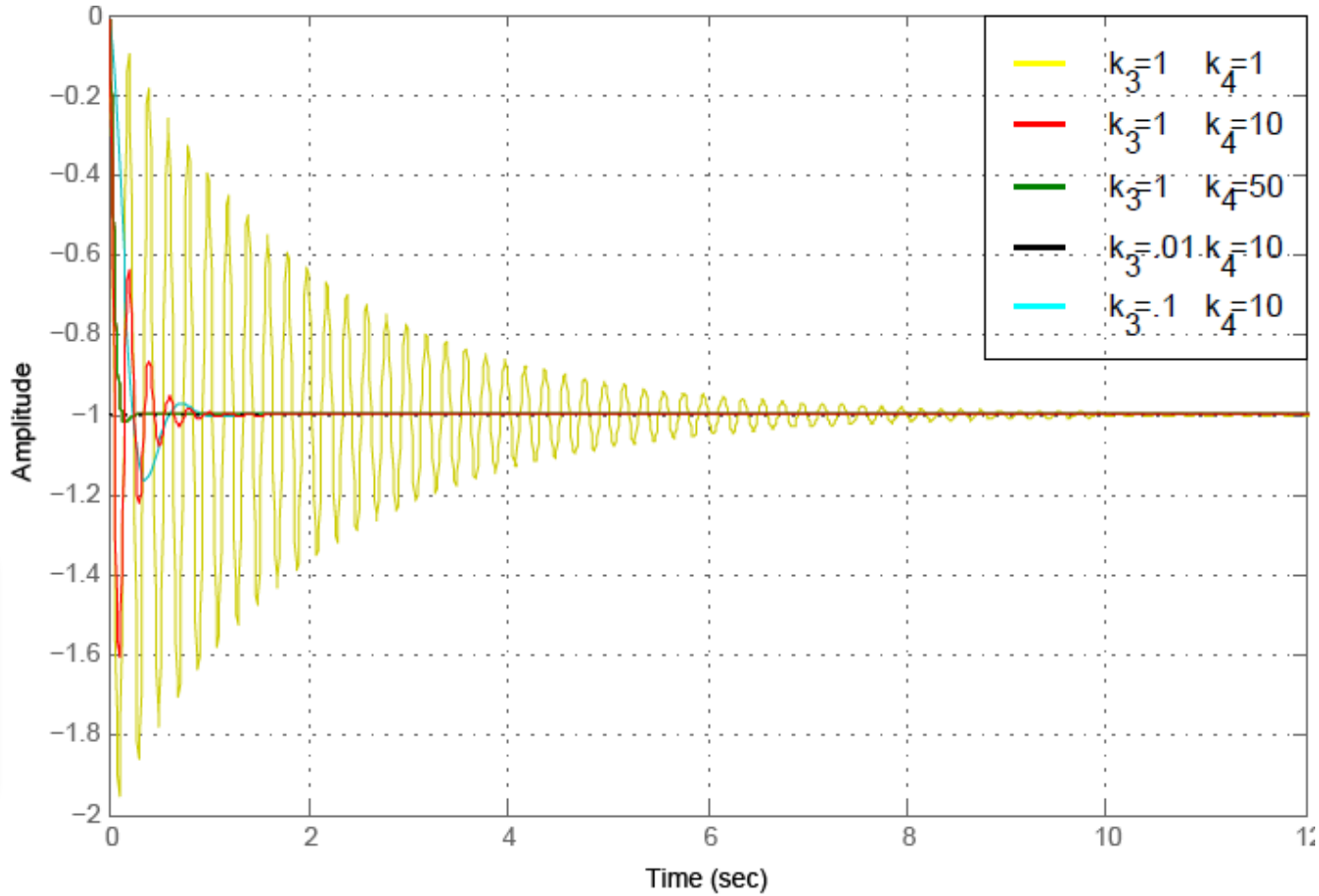

Discussion

Conclusion

! Protocol behavior was not easily predictable.

- Now, all linear chemical networks are analyzable, with similar procedures to those shown.
- Non-linear networks are linearizable (MCA), with the side effect of a high computational complexity.
- Even links with delay have been analyzed (not shown).

Limits & Future

- Bi-stable systems.
- Fixed point near the saddle point.
- Stochasticity of CNPs briefly introduced.

End

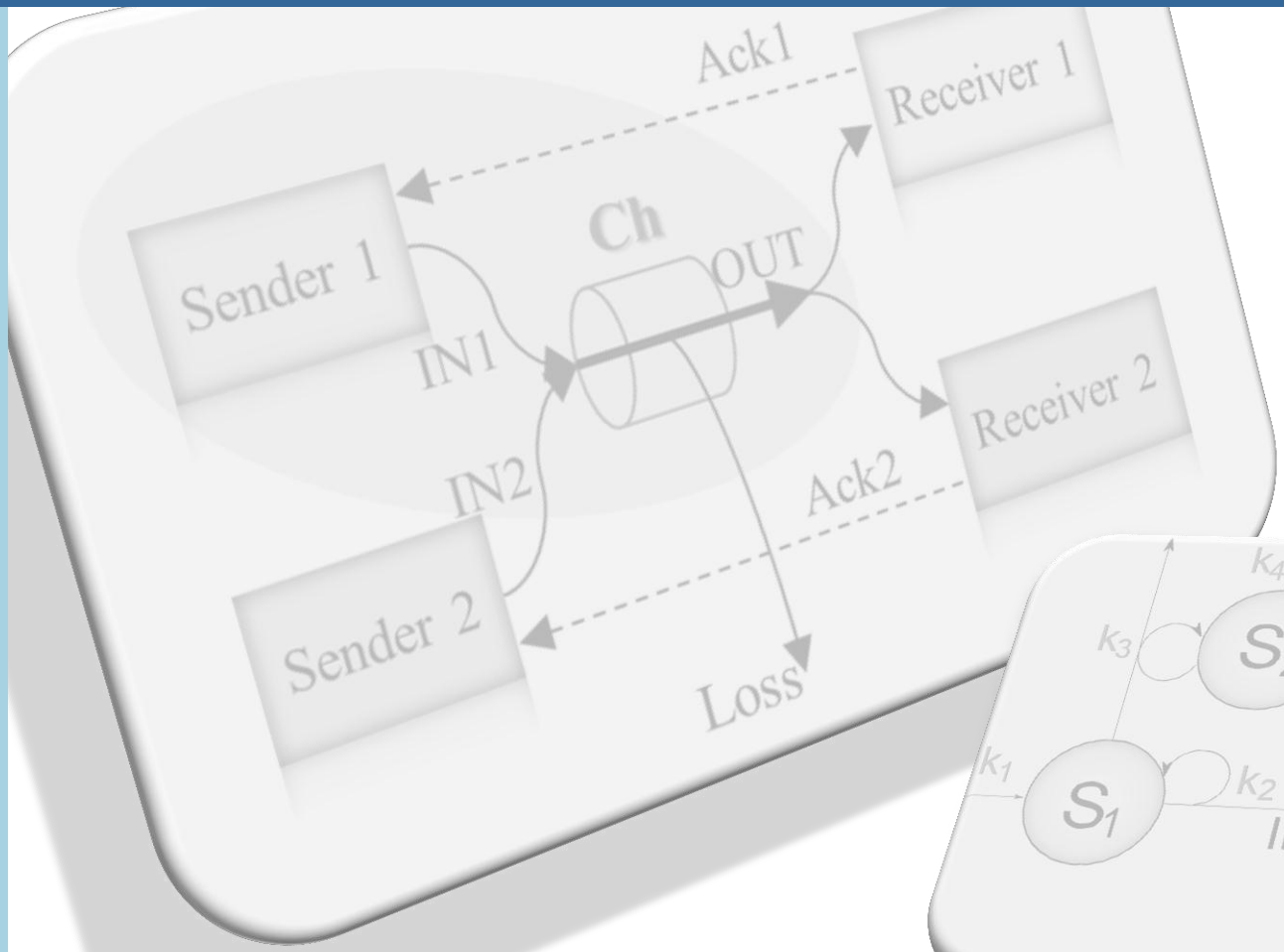

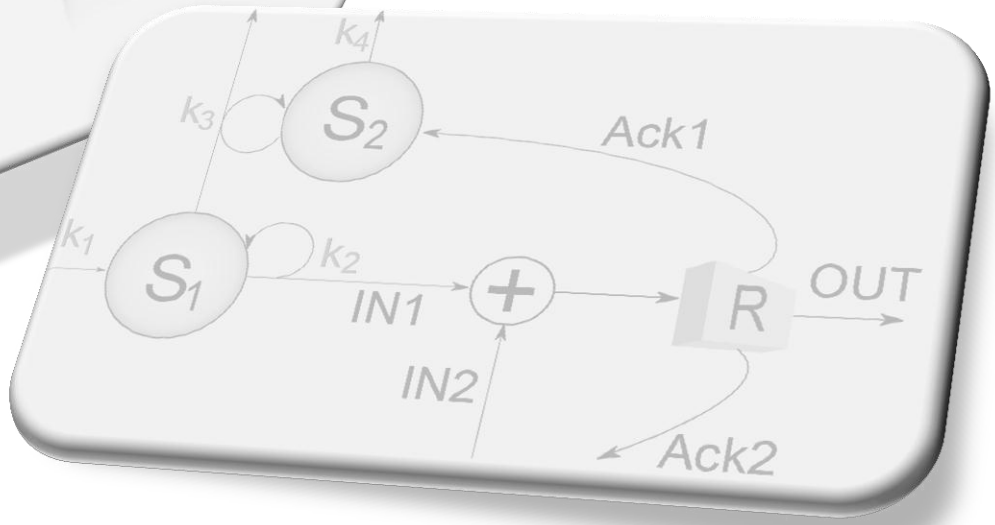

Thank You